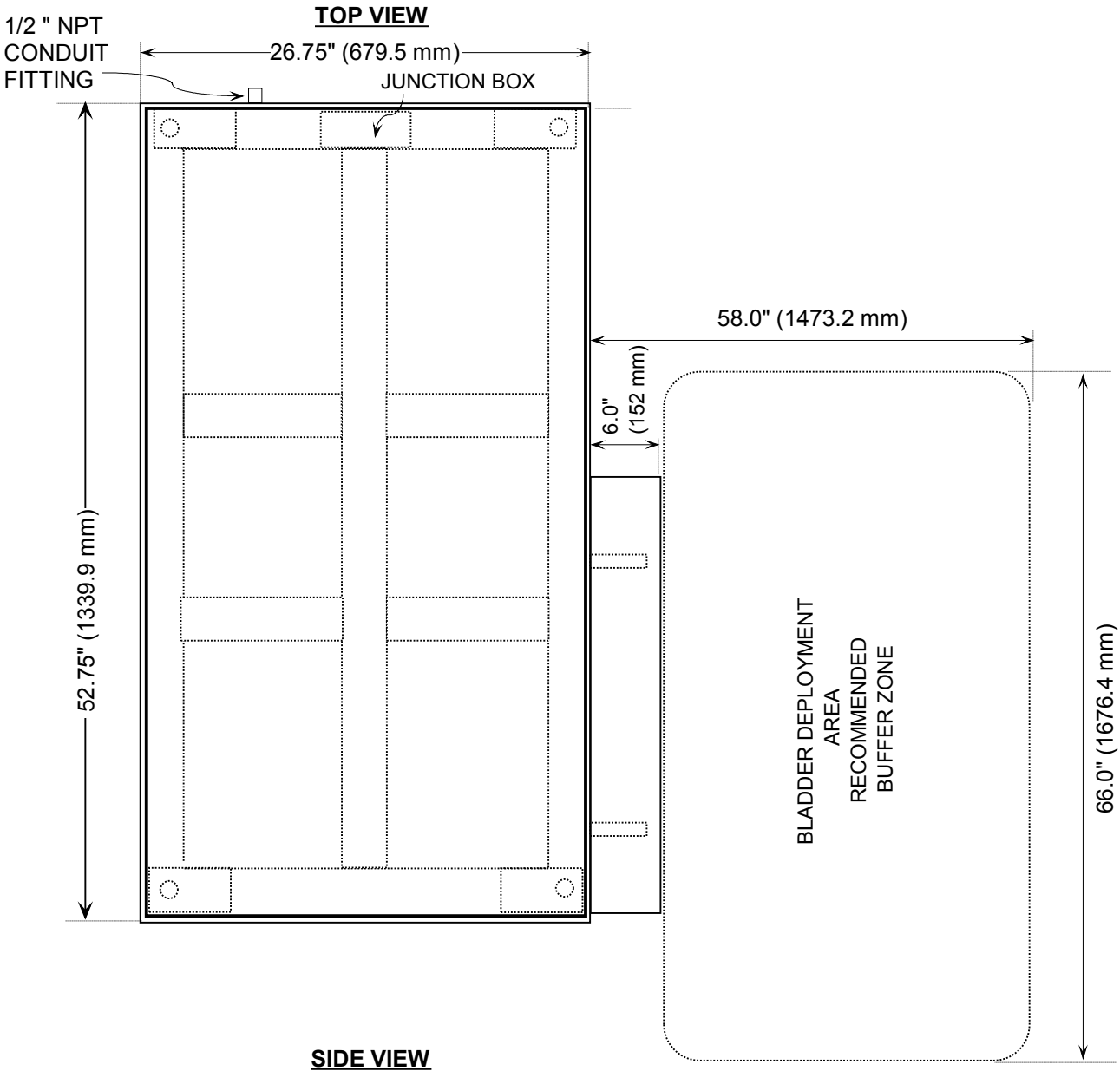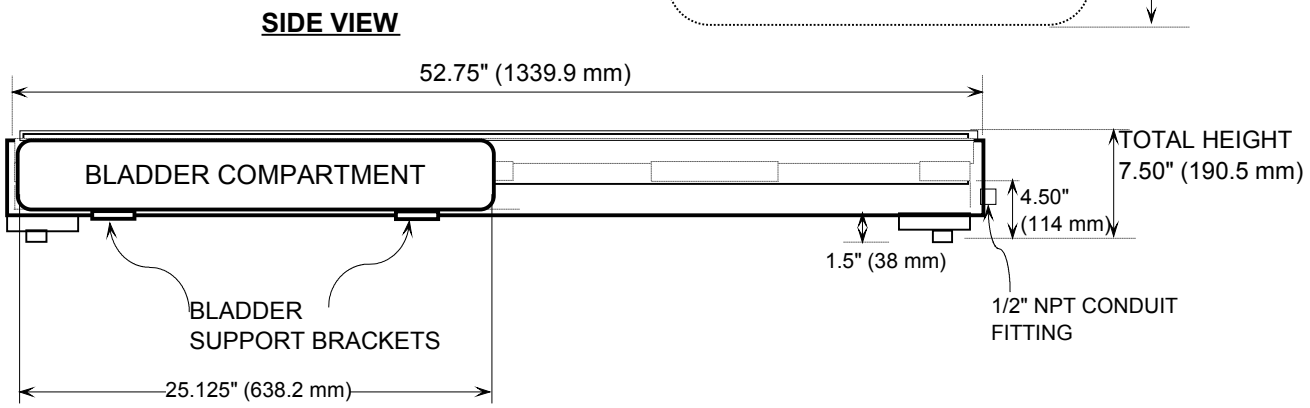MODEL 4042WB™ 26x52 IN SPILL CONTAINMENT SCALE WITH BLADDER